STERLING®

A KOHLER® COMPANY

ENSEMBLE™

36″ (914 mm) OVAL BATH/SHOWER SYSTEM WITH BACKER BOARDS

71100116

ALSO 71100118, 71100126, 71100128

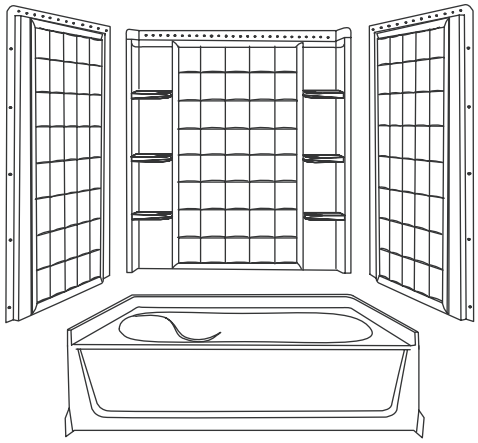

Features

- *Compression molded from our exclusive solid Vikrell® material*
- *Tongue-and-groove 4-piece modular design allows for easy "snap together" installation*
- *Gentle sloping back, neck, and armrest in bath design*
- *Bath and integral apron eliminates installation step*
- *Durable high-gloss finish*
- *10-year consumer/3-year commercial limited warranty*
- *Available with above-the-floor drain*
- *Wall surround allows for attachment of grab bars*
- *60-1/4″ (1530 mm) x 37-1/2″ (953 mm) x 73-1/4″ (1861 mm) complete unit rough-in dimensions*
- *60″ (1524 mm) x 36″ (914 mm) x 72″ (1829 mm) complete unit finished dimensions*

Codes/Standards Applicable

Specified model meets or exceeds the following:

- *ANSI Z124.1.2*
- *ASTM E162*
- *ASTM E662*
- *CSA B45*

Colors/Finishes

- 0: White
- Other: Refer to Price Book for additional colors/finishes

Specified Model

Model	Complete Unit Description	Colors/Finishes	
71100116	36″ (914 mm) oval bath/shower system and wall surround with backer boards, left drain	❑ 0	❑ Other____
71100118	36″ (914 mm) oval bath/shower system and wall surround with backer boards, above-the-floor left drain	❑ 0	❑ Other____
71100126	36″ (914 mm) oval bath/shower system and wall surround with backer boards, right drain (shown)	❑ 0	❑ Other____
71100128	36″ (914 mm) oval bath/shower system and wall surround with backer boards, above-the-floor right drain	❑ 0	❑ Other____

Model	Wall Component Description	Colors/Finishes	
71104106	Complete wall set with backer boards	❑ 0	❑ Other____

For more information visit SterlingPlumbing.com or call 1-800-STERLING

Technical Information

Fixture*:	
Basin area:	
Bathing well, bottom	40″ (1016 mm) x 21″ (533 mm)
Bathing well, top	52″ (1321 mm) x 29″ (737 mm)
To overflow:	
Water depth	11″ (279 mm)
Capacity	40 gal (151.4 L)
* Approximate measurements for comparison only.	

Model	Door width	Door maximum height
71100116 71100118 71100126 71100128	58-1/2″ (1486 mm)	55-3/4″ (1416 mm)

Installation Notes

Install this product according to the installation guide.

Size the drain cutout to fit the drain assembly that will be used.

Double studding is recommended for pivot shower door installations.

Studs should be positioned roughly as shown.

Attach grab bars at the specified backer board locations only.

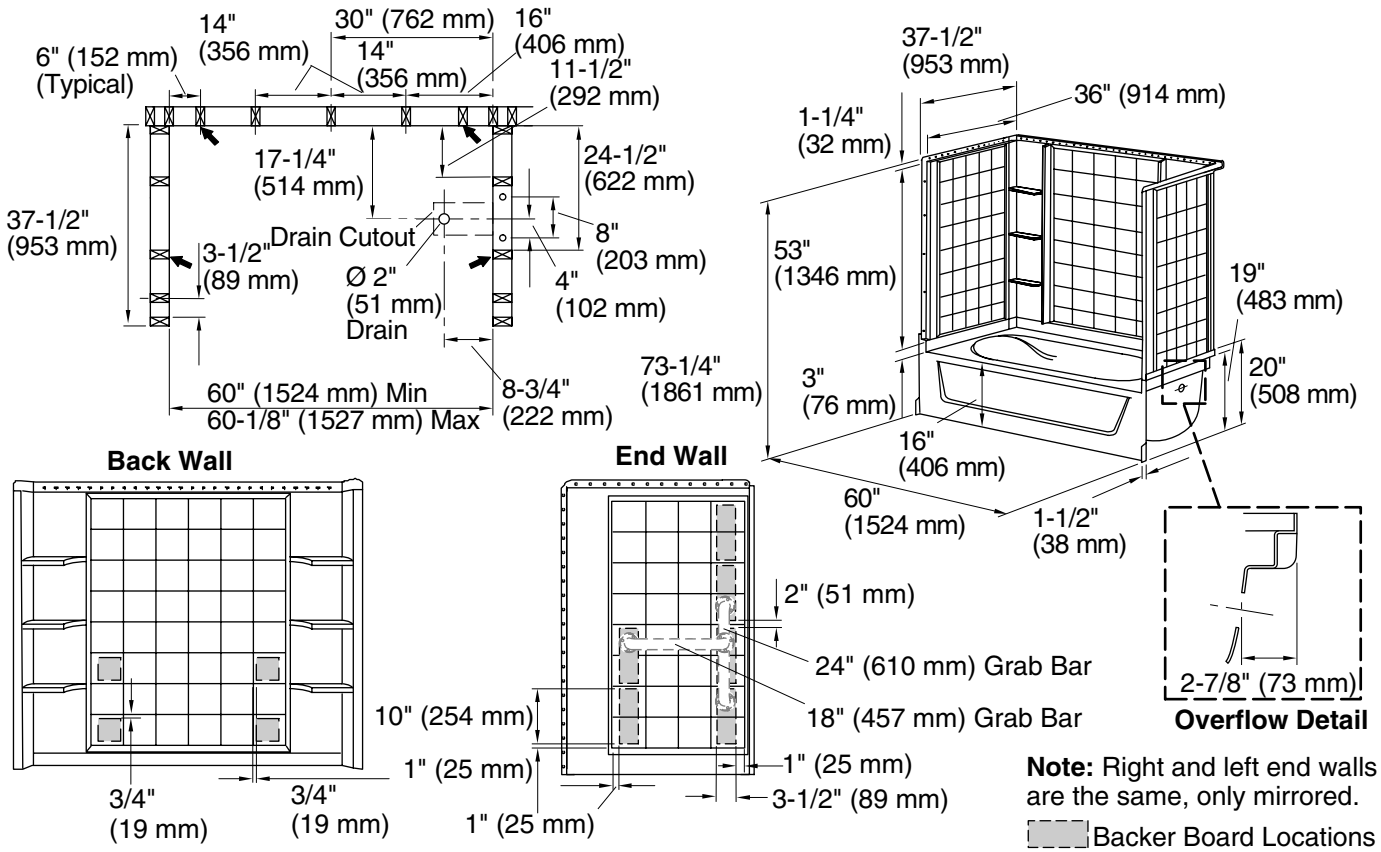

Note: Right and left end walls are the same, only mirrored.

Product Diagram

STERLING
A KOHLER COMPANY